1. Pin Assignment:

- 3V out
- ALARM
- REC
- GND

2. REC: Recordstart/stop

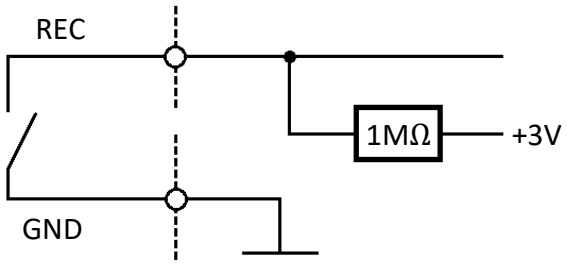

3. ALARM: Alarm Output

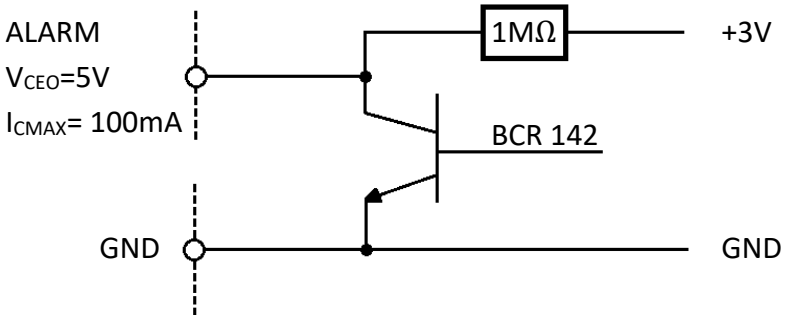

4. GND: Ground